Description

The FIRE KILL™ Model SAS-WP is a modular stand-alone low pressure watermist system for protection of ordinary hazard using automatic nozzles.

The low pressure water mist effect is achieved by using compressed gas to pressurise a water cylinder which in turn forces the water through the system and the nozzles. The SAS-WP activates based on pressure drop in a sensor line connected to the first water cylinder. The pressure drop is caused by an activated nozzle within the protected space.

The stand-alone system can be supplied as a complete pre-mounted skid or loose water cylinders and gas cylinders to be installed locally either into a skid or clamped to the building structure.

Approvals

The FIRE KILL™ SAS standard system components are a FM approved.

Technical data water cylinder

Specific Description	
Cylinder volume	120 litre
Max. working pressure	16 Bar
Material	Stainless Steel
Surface treatment	Natural
Cylinder neck threads	1" BSP
Inlet threads adapter	¾" BSP Female
Outlet threads adapter	¾" BSP Female
Empty weight	55 Kg
N^2 Cylinder	Depends on requirement

Schematic

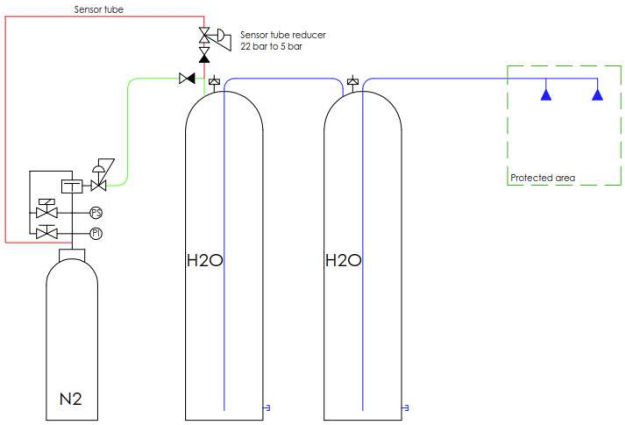

Applications

In the FIREKILL™ Low Pressure Water Mist Systems range, there are units specifically designed for each individual protection requirement. Systems are designed according to the water requirements for controlling, suppressing or extinguishing the fire, and their specifications for storing the water required for extinguishing.

There are a range of discharge nozzles with a specific design for each specific risk, according to the various approvals and tests carried out. These designs can be adapted to both local applications and total flooding, fitted with open or closed nozzles. Consult the product data sheets for the various nozzles that can be used with the system.

The FIREKILL™ Model SAS-WP has both low- and high-pressure cylinder banks which store the extinguishing agent at atmospheric pressure and propels it via pressurised high pressure cylinders, typically nitrogen at 200 bar.

Actuation by electrical or pneumatic components or manual activation can be complemented for any system for added safety. The FIREKILL™ Model SAS-WP system ensures more efficient coverage of hazards than could previously protected by deluge or sprinkler nozzles.

VID Fire Kill ApS
Svalbardvej 13,
DK-5700 Svendborg
Denmark

Phone: +45 62 62 10 24
Fax: +45 62 62 36 61
E-mail: sales@vidfirekill.com
Internet: www.vidfirekill.com

No.: DS-220517-01-01 SASWP 120_UK
Rev. 01
Date of first issue: 17-05-2022
Date of revision: 17-05-2022

Installations

Components and pipes should be cleaned/flushed from debris, shavings and impurities and welded items should be cleaned to make sure that there is no abundance of loose debris. The installer should be careful not to get sealant into the pipe system. It should be checked extensively that the components are positioned correctly according to the system plans and specifications.

All components should be securely fastened to rigid, robust structures by approved means. The fire protection system shall not consist of material combinations with risks of galvanic corrosion system pipes and other system components. It is advised that the system utilize pipes and system components in stainless steel, AISI 304 or AISI 316, or copper alloys as to minimize risk of corrosion and clogging of the pipes and other system components.

It is prohibited to use components with black iron parts and other such highly corrosive materials else used in traditional sprinkler systems.

System components shall in all cases be according to the local applicable standards and be accepted by the authorities having jurisdiction.

Caution

The FIREKILL™ nozzles shall be installed in locations not containing materials which may produce violent reactions or significantly hazardous materials when reacting with water and should be installed in locations where the nozzle is not likely to sustain physical damage.

The propellant gas cylinders are high pressure gas cylinders and shall ne handled with care. Any protecting caps shall not be removed before the cylinders are properly fastened.

Contact

For further information on FIREKILL™ products, please contact our sales department at Sales@vidfirekill.com

VID Fire-Kill APS is not responsible for any errors or omissions, or for the results obtained from the use of this information. All information in this document is provided "as is", with no guarantee of completeness, accuracy, functionality, timeliness or of the results obtained from the use of this information.